Process-Design Considerations for a Compressor Dry-Gas Seal-System Interface

Chung Leong, Independent Consultant, and **Sanjiv Goyal,** Fluor Enterprises

Summary

The dry-gas seal (DGS) is a critical integrity component of the centrifugal or screw compressor, providing shaft sealing and preventing uncontrolled escape of process gas from the casing. Failure of this component in the compressor can result in plant outage and considerable revenue loss to the operating company.

The DGS relies on a very thin gas film that is formed between a stationary ring and a rotating ring. Pressurized and clean seal gas is introduced to work as the gas film, preventing leakage of the compressor casing gas. Minor seal-gas leakage from the gas seal is at low pressure, and is usually collected in an enclosed system for disposal (e.g., low-pressure or atmospheric flare).

Failure of the DGS seal is often not caused by its intrinsic design issues, but rather by aspects peripheral to the seal. The need for pressurized seal gas necessitates the evaluation of possible sources of gas supply during normal operation and startup. Possible sources of supply evaluated in this study include high-pressure gas-export pipeline, multitrain arrangement to supply gas from the operating train to the standby train, and the use of gas boosters. Seal-gas cleanliness demands fine gas filtration as mandatory before gas entry to the seals. Because the seal gas undergoes different levels of pressure reduction within the seal, potential liquid (or condensation) and, in some cases, solid (hydrate) formation in the gas seals must be studied together with its mitigating measures in the design to avoid seal failure. The possible presence of other contaminants because of sour-gas components is addressed, along with suggested treatment methods. Other design considerations, such as reverse rotation, depressurization limitations, and reverse pressurization, are also addressed.

Whether engineers are engaged in designing the gas-compression system or in troubleshooting the facilities operation, a clear understanding of these various aspects is important. This paper does not address the design of the DGS, which is proprietary to the manufacturer. On the basis of past experiences, this paper describes the various salient features and peripheral requirements of the DGS, and offers recommendations for interfacing with the compressor vendor from the process-system-design and -operation perspectives.

Introduction

Centrifugal and screw compressors are common rotating equipment that find application in a variety of industries (e.g., oil- and gas-production facilities, refineries, and petrochemical works), operating over a wide range of pressures. A seal system between the casing and shaft is provided to prevent the escape of uncontrolled process gas to the atmosphere. Process gases that are hazardous or toxic will present serious safety issues when leaked to the environment. The loss of containment can cause facilities downtime, leading to loss of business revenue.

In the last 2 decades, the design of the seals has evolved along with growth in the size of the compressors. Compressors are now designed to handle extreme operating conditions—750 bar and –160°C—thus, the seal design has to adapt to these new requirements. The oil-film seal commonly used in earlier compressor designs has been mostly phased out by DGSs. More than 80% of centrifugal compressors today are manufactured with a DGS (Stahley 2001). Considerations for retrofitting compressors with oil-film seals to DGSs are presented in Southcott et al. (1995).

The DGS system offers many advantages over the oil-film-seal system:

- Lower gas-leak rates to atmosphere.
- Simpler and lower equipment weight because this does not require oil-circulation equipment—good for oil and gas offshore applications, where space and weight are important considerations.
- Reduced power consumption because there is no oil pumping or stripping of sour oil. In DGS systems, the horsepower required for gas shear is reduced by 95% of that of oil shear, which is an important aspect in very large compressors such as those used in liquefied-natural-gas (LNG) plants.
- Reduced hookup time and lower maintenance because this system does not have an elaborate seal-oil system such as overhead tank, oil pump, coalescing filter, or heaters.
- Seal-oil ingress to the process leads to the contamination of process gas (discharge side). For the DGS, the seal gas is chosen to be compatible with the process gas and does not risk any contamination.
- Process gas is known to dissolve in seal oil and will require degassing before pumping to seal, and cleaning before disposal. If the process gas contains H_2S or NH_3, disposal of such toxic gases from the seal oil would require extra care. There is no such problem associated with the DGS. For the very-high-pressure compressors handling high content of H_2S or NH_3 in the process gas, oil-film seal is considered unsuitable, and DGS is the preferred choice.

Working Principles of DGS

The essential parts of a DGS consist of two mating rings: rotating and stationary. When the compressor is not running, the rings are held in close contact by a spring. When the compressor is spinning, hydrodynamic forces created by the etched grooves on the rotating ring will force the stationary ring against the spring, creating a working gap (2 to 5 μm) between the two rings.

Fig. 1 shows a typical tandem DGS that is widely used in the hydrocarbon industry. (The secondary seal functions as an additional barrier between the process gas and atmosphere and as a backup seal in the event of primary-seal failure.) Using this as an example, the gas-flow path through the DGS can be traced.

Filtered gas is injected into the seal to prevent the casing gas from migrating to the seal gap. In addition, the seal gas will also make up for the leakage that occurs across the seal faces. A major portion of the injected seal gas (typically >80%) travels by means of the inner labyrinth seals and into the compressor casing, mixing with the process gas. The seal-gas pressure has to be greater than that which is in the primary seal (typically 25 psig greater, as recommended by the manufacturer).

The balance of the flow (typically <20% of injected gas) will account for the gas leakages across the primary-seal face, and this rate will depend on the gap opening width, speed of rotation, and gas temperature. The leaked gas (primary vent) is typically collected

Original SPE manuscript received for review 11 May 2015. Revised manuscript received for review 28 July 2015. Paper (SPE 178912) peer approved 8 September 2015.

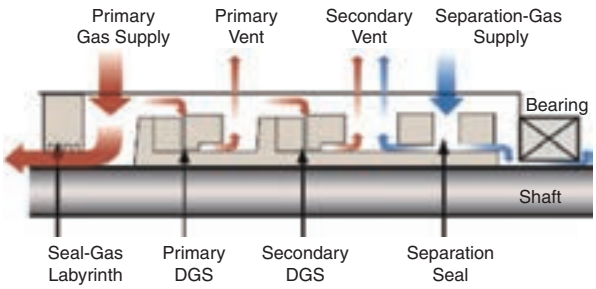

Fig. 1—Typical tandem DGS.

in a closed system and disposed of in a low-pressure flare or atmospheric vent to a remote location. The primary vent line is designed typically with an orifice or check valve to maintain a low operating pressure (5 to 8 psig) to allow gas to flow to the secondary seal. From the seal-gas-injection point to the low-pressure disposal system after the primary seal, liquids or condensation must not be present. The presence of liquid on the seal faces will cause seal failure.

At the secondary seal, separation gas (typically air or nitrogen) is used for purging. The separation-gas barrier will prevent the seal gas from migrating from the secondary seal into the bearing/lube-oil system and will prevent oil from migrating into the gas seal. The leaked gas from the secondary seal will combine with the air or nitrogen and be vented to a safe location. For a process schematic of a typical seal-gas and separation-gas system, refer to **Fig 2.**

Seal-Gas-Supply System and Design Considerations

For use as seal gas, the gas must be

- At a higher pressure than the operating pressure of the primary seal (typically recommended by the equipment manufacturer to be 25 psig or greater).
- Filtered of particles (typically 1 μm) and free of solids or corrosion products from the piping or tubing. On-skid filters are usually provided at the seal-gas panel supplied by the manufacturer. Some operators have used an independent coarse filter (typically 10 μm) upstream because the on-skid units are small and prone to frequent fouling.
- Conditioned to ensure that liquids or solids do not form in the seal assembly over the entire operating-pressure range (typically by superheating). Solids can take the form of ice, gas hydrates, and sulfur that may be present in sour gas.

Note that where heat losses to the surroundings can lower the gas temperature significantly, heat tracing should be considered, especially where stagnant sections are present.

Sources of Seal-Gas Supply. The seal-gas supply to the compressor seals should cover the entire operating-pressure range of the compressor. In all cases, it is highly recommended to have the gas composition at hand and plot a phase diagram overlain with flash curves showing the entire pressure range of operation. This diagram will provide a confirmation of the design strategy and demonstrate that no liquids or solids will form in the seal assembly.

Primary Source of Seal-Gas Supply. During normal operation of the compressor, seal gas can be supplied from the following sources:

- Discharge of the compressor: A slip stream taken from the immediate discharge of the compressor is typically used, although it can be from the interstage or interimpeller as required to reduce compression power losses. This gas is usually sufficiently superheated, and will not form liquids over the entire range of operating pressures in the gas-seal assembly.
- From other sources at the facility: Any gas that is available at the facility and compatible with the compressed gas and metallurgy of the seals and compressor system. Some natural gas from sour-gas reservoirs is dissolved, with elemental sulfur that can precipitate as solid when the pressure is re-

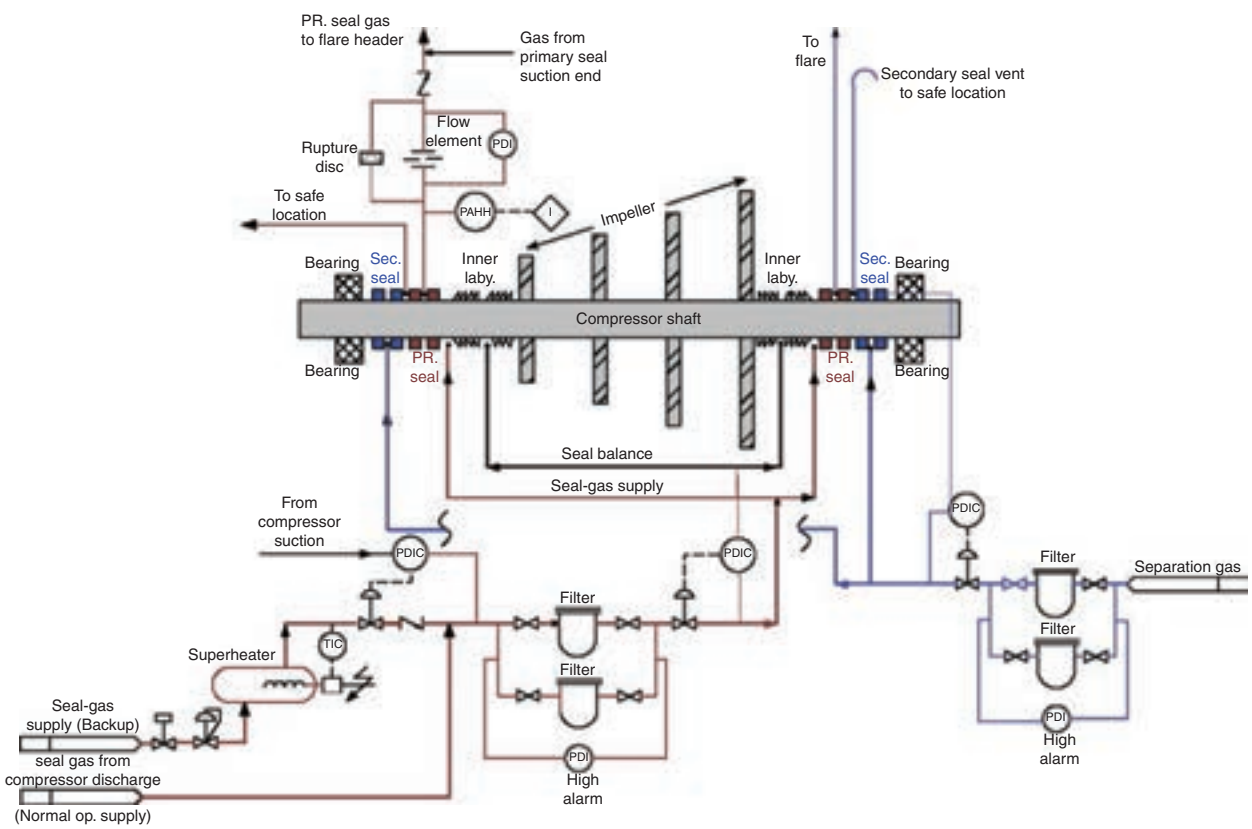

Fig. 2—Typical seal-gas and separation-gas system. (TIC = temperature indicating controller.)

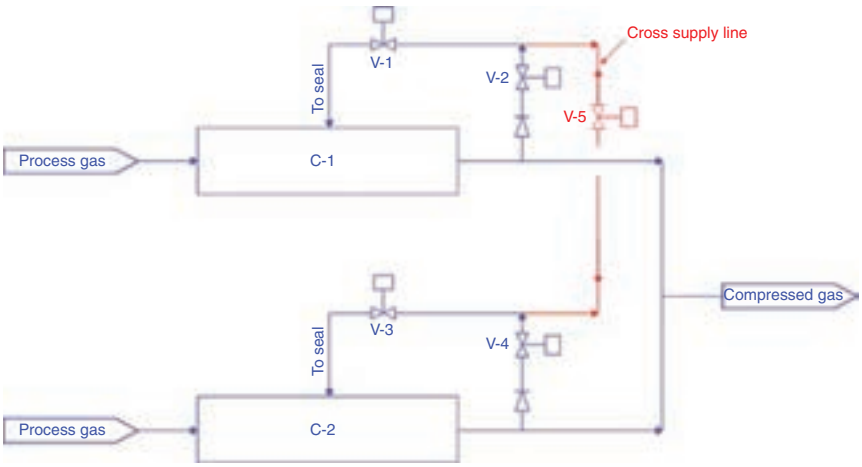

Fig. 3—Two-train seal-gas supply.

duced. While H_2S in the gas stream is the primary source for elemental sulfur, mercaptans, sulfates, and thiols can provide a secondary source if the correct conditions exist (Brunner et al. 1988; Chesnoy and Pack 2007). If sour gas is to be used as seal gas, studies should be taken up to avoid sulfur depositing on the seal faces. Provisions should also be taken to avoid the presence of oxygen in the gas stream. Alternatively, if possible, sweetened gas should be used as seal gas. Where sweetened gas is not available, it may be possible to deploy a superheater such that the elemental-sulfur-depositing temperature for the gas is not reached upon pressure reduction. Careful consideration is required when dealing with high-H_2S-content gas. For sour-gas injection involving high-pressure compressor casings, gas is compressed in a positive-displacement compressor before it is injected in the seals. Care should be taken in the design to avoid the transmission of pulsations and lube oil to the seal from the auxiliary pressure-booster compressor.

Secondary (Backup) Source of Supply. When the primary supply of seal gas is not available during scenarios such as startup or tripped condition, seal gas is required to be brought in from other sources. It is not uncommon that compressor and seal manufacturers would require the seal gas to be fully established before permission is given to start the machine. The following may be considered for the secondary source of seal-gas supply:

- High-pressure-gas volume: An alternative source of supply can be an inventory of high-pressure gas inside or peripheral to the facility. In a typical offshore application, the subsea gas-pipeline gas, which is a large reservoir of high-pressure gas, may be used to supply the seal gas to the compressor. Be aware that such a gas can be at low temperature because of cooling of the pipeline gas by cold seawater, and conditioning in the form of dewpointing and superheating can be required. This option may not be attractive if the gas in the pipeline has been metered for sales and requires some form of a buy-back metering system.
- Multiple-train arrangement: In a multiple-compressor-train arrangement, it is possible to interconnect the seal-gas-supply system such that one train can feed to another (i.e., the operating train can feed seal gas to enable the startup of another train). In such an arrangement, attention should be given to the operation of the routing valves/shutdown valves on the seal-gas lines. Where stagnant portions of the seal-gas piping network are encountered, heat tracing can be used to maintain the desired gas temperature.

  Fig. 3 shows a two-train arrangement for the seal-gas supply. The cross supply line will supply the seal gas from one compressor to another through Valve V-5. During startup, typically V-5 and V-3 will be set on timer (with C-1 supplying to C-2) in the compressor-startup logic.
- Gas-pressure booster: A pressure-booster system, consisting typically of air-driven gas-booster compressors (one operating and another standby), can be used to provide seal gas at a higher pressure than that of the compressor casing pressure. This is typically 25 psi greater than the casing gas pressure. Such an arrangement is used when the compressor operation cannot produce seal gas of sufficient pressure for use and no other sources of backup gas are available. An example of such a situation is when the compressor has tripped to idle speed. Gas boosters are configured to start automatically when the seal-gas pressure has fallen. The gas-booster system will be installed upstream of the seal-gas filters. To maximize the life of the booster unit, the compressor logic will cease operation of the boosters when sufficient positive pressure is reached at the discharge of the compressor. During design, consider this option carefully because it will entail additional cost and maintenance for the extra hardware. Some operators have expressed reservations because of reliability issues. **Fig. 4** shows a typical gas-booster system. In this case, reciprocating compressors are used. There are cases in which small electric-motor-driven centrifugal units are used.

  The gas-booster system has a distinct advantage over the supply of seal gas from another high-pressure source. Because of the pressure-control setup for the seal system, usually configured for differential pressure (PDIC), the high-pressure gas-supply source can pressurize the compressor casing to a much higher pressure than that allowable for a startup. This will then necessitate isolating and depressurizing the casing for the compressor before the startup. Because the gas-booster suction and discharge are within the suction and discharge isolation valves (yard valves) of the compression system, this situation does not arise. No new gas is added to the isolated compression system.
- Inert-gas source: It is possible to use inert gas, such as nitrogen, for startup. The nitrogen may be supplied from an available storage that is sufficient for the duration of a compressor start. Nitrogen generated from pressure-swing-absorption (PSA) units can be at 97% typically, with the remainder as oxygen. PSA units can supply higher-purity nitrogen (greater than 99.99%) if required. Cylinders may provide additional storage, if required. Typical purity of such nitrogen cylinders is greater than 99.9% and suitable for most applications. At times, attention should be given to the nitrogen purity because

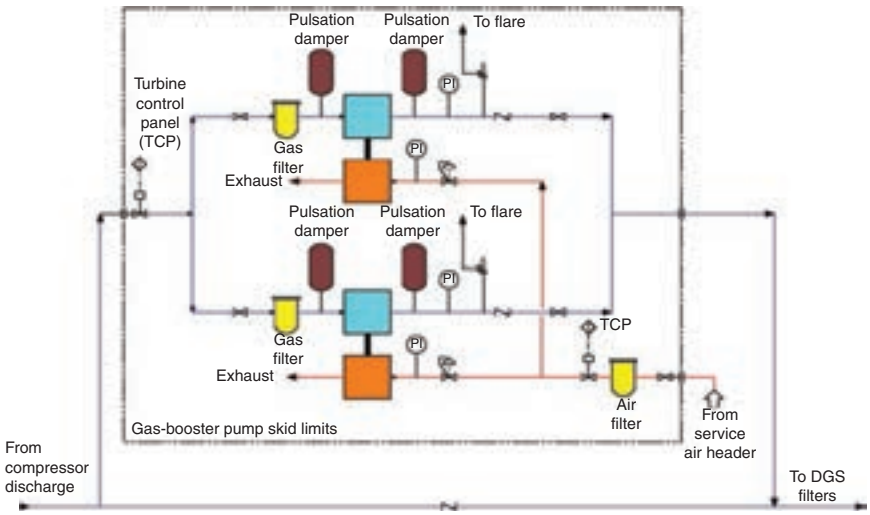

Fig. 4—Gas-booster system.

a small amount of O_2 contaminant leaking inside the process can pose safety issues, deactivate any catalyst used in the process, or lead to sulfur precipitation from H_2S-containing process gas at high pressure.

Quality of Seal Gas. ***Contamination by Liquids.*** The seal-gas supply should be dry without any possibility of liquid formation because it travels through the filtration system and mechanical seals. The seal gas undergoes pressure reduction from the supply pressure to almost atmospheric pressure. During pressure reduction, the gas will cool because of the Joule-Thomson effect and may form liquid if the temperature falls below the dewpoint. These liquid droplets traveling along with gas will cause permanent damage to the seal faces. This should be studied with a process simulator, such as Aspen HYSYS® or Schneider Electric PRO/II®. For a known gas composition, there is a phase diagram that provides the zones of gas, liquid and gas/liquid state depending on pressure and temperature. With isenthalpic pressure reduction from the supplied pressure to atmospheric pressure, the gas temperature should be at least 20 to 25°F greater than the dewpoint. To ensure that a dry gas is supplied in all the operating scenarios, it may be necessary to preheat the supplied seal gas in a heater so that it is beyond the dewpoint (i.e., to achieve a superheat of 20 to 25°F greater than the dewpoint). Refer to the phase diagram in **Fig. 5,** which shows the gas zone, two-phase zones, and the effect of superheating the seal gas.

In a typical oil-and-gas-production application, a mixture of hydrocarbon gases with a small water-vapor-fraction is used as seal gas. This gas mixture, while undergoing the pressure reduction, can form hydrate inside the seals. Hydrate is a solid and resembles packed snow or ice. Formation of hydrate will be very detrimental to the seals. Hydrate formation should also be studied in the process simulator. The hydrate curve for the seal gas is also shown on the phase diagram (Fig. 5).

As a good practice, the seal-gas tubing downstream of the filters is electrically heat traced to ensure that there is no condensation in the last connection to the seals.

Contamination by Solids. Because the separation gap between the faces of the static and rotating rings is approximately 2 to 5 μm, the seal gas is filtered typically to 1-μm filtration level. Typically, duplex filters with stainless-steel construction are provided. The tubing downstream of the filters should be stainless steel for the sake of maintaining gas cleanliness.

Other Design Considerations. ***Reverse Pressurization.*** Care should be taken to ensure a low developed pressure in the low-pressure flare header where the seal gas from the primary seal is collected. A high backpressure in the primary seal vent can trigger a shutdown. For a collection system that has multiple inputs from the primary seals of multiple trains, one must ensure that the main header is sized for high flows (e.g., seal failure of one train while allowing the other trains to continue operating). During the design of the flare header, the compressor manufacturer should be consulted for the maximum backpressure that the seal can withstand.

Depressurization. In an emergency event such as fire in the vicinity, the compressor is tripped with automated blowdown (depressurization) of the entire compression system. Some of the components of the seal can exhibit permanent deformation if the compressor casing is depressurized too rapidly (also commonly referred to as explosive decompression). Typically, the depressurization is performed to one-half of the settled out pressure or 100 psig, whichever is less, within 15 minutes. During the design stage, the acceptable maximum depressurization rate should be checked with the compressor/seal manufacturer. Mating rings are typically tungsten carbide. However, silicon carbide is also specified because of lower density for high-speed applications. The O-rings must be compatible with all specific services. Special care is given for high-pressure applications to ensure that the O-ring is not damaged during rapid depressurization. When elastomer is used for O-rings, hydrocarbon gases can permeate into the elastomer. During depressurization, the impregnated gases are released within the elastomer, causing the elastomer to blister. The presence of methanol, H_2S, and aromatics in the process gas is known to aggravate the situation. For high-pressure applications (higher than 50 bar), polytetrafluoroethylene (PTFE) -based material instead of elastomer should be used because PTFE can tolerate a much higher rate of decompression.

Reverse Rotation. Unidirectional DGSs will not tolerate reverse rotation because it leads to seal damage. It is possible that a compressor can experience reverse rotation after a trip during the gas settling-out period or because of a leaky or stuck-open discharge shutdown valve. A high-integrity check valve placed downstream of the discharge nozzle and upstream of the discharge shutdown valve can help to prevent substantial backflow through the casing. Any backflow will pass through the antisurge valve, which is open when the compressor is tripped.

If the blowdown valve is located on the suction side within the compression system, the compressor can experience reverse rotation in the event of blowdown. In addition to placing a check valve as described in the preceding, careful attention to the location of the blowdown valve and specifying the higher-leakage class of the discharge-side shutdown valves will help. It is also recommended that the entire compression-system design be subjected to dynamic simulation to ensure that reverse rotation does not occur.

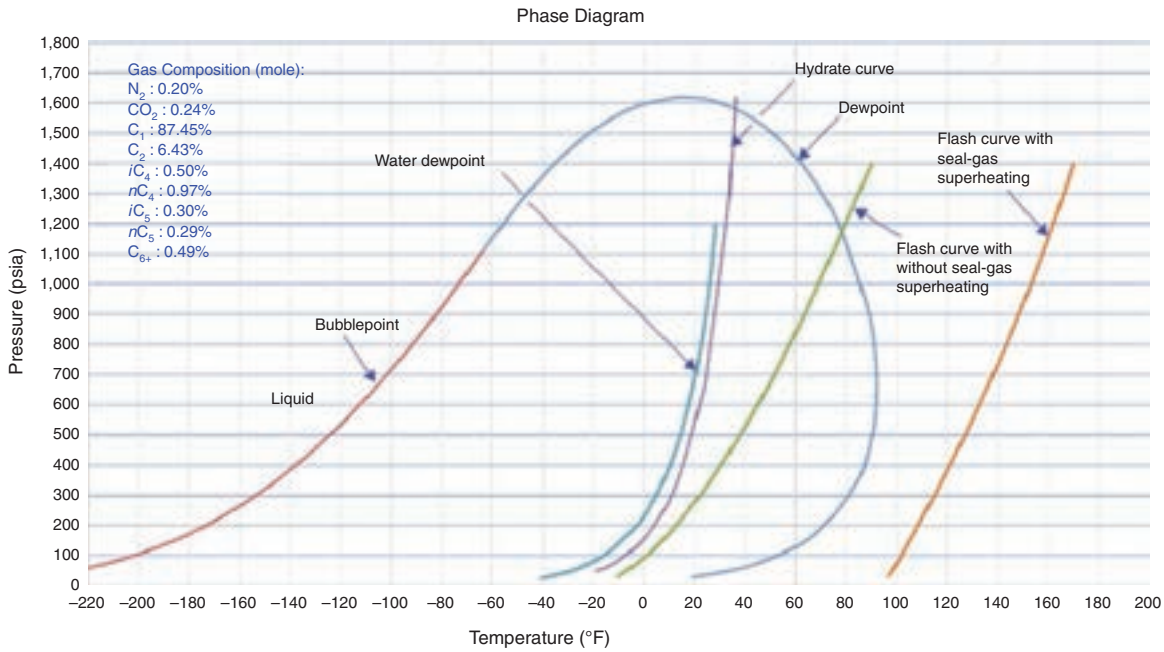

Fig. 5—Phase diagram for seal gas.

During the design of the compression system, consideration may be given to the use of bidirectional seals, which can tolerate reverse rotation without becoming damaged. The compressor manufacturer should be consulted closely. The seal-gas-leakage rate may differ from that experienced with a unidirectional seal.

Conclusion and Recommendation

For process engineers that work in the early phases of a design project (e.g., front-end engineering design), when minimal equipment data are available, the compressor DGS interfaces are often deferred to a later stage, awaiting manufacturer's data, and eventually omitted from the planning stage. This paper described the aspects of the DGS interfaces that the design engineer should be aware of and make considerations for in the later stages. In a multidiscipline-workforce environment, these considerations represent an attempt to inform, engage the relevant parties, and cross the boundaries among process-design engineers, mechanical engineers, and compressor manufacturers. In a retrofit situation in which an existing compressor's seals are being considered for changeout from oil-film seals to DGSs, an awareness of the interface requirements will lend itself to a more complete assessment of the work ahead.

An important aspect to note is the quality of seal-gas supply. The seal gas should be a conditioned gas, free from solids and liquids over the operating range and from all the derived sources. A good design of the filtration system is a requirement. It is highly recommended that the phase diagram for the seal-gas composition be generated and that the liquids- and solids-formation conditions be ascertained and addressed accordingly in the design.

High-pressure gas from different sources in the plant as backup gas for the seals should be discussed, with the intention to prompt the designer to review all options available exhaustively and arrive at the optimal solution. The effect on the seals as a result of reverse pressurization, reverse rotation of the compressor, and compression-casing depressurization should be studied carefully and interfacing with the compressor manufacturer would be required.

A proper and well-thought-out design of seal-gas supply during startup, shutdown, and normal operation of the centrifugal compressor is not just important for the integrity of the seals, but will contribute greatly to the uptime and availability of the gas compressor.

References

Brunner, E., Place, M. C. Jr., and Woll, W. H. 1988. Sulfur Solubility in Sour Gas. *J Pet Technol* **20** (12): 1587–1592. SPE-14264-PA. http://dx.doi.org/10.2118/14264-PA.

Chesnoy, A. B. and Pack, D. J. 2007. Unwanted sulfur contamination in natural gas. *Hydrocarbon Processing*, 47–56.

Southcott, J. F., Sweeney, J. M., and Feltman, P. L. 1995. Dry Gas Seal Retrofit. In *Proceedings of the 24th Turbomachinery Symposium*, 221–230, Turbomachinery Laboratory, Texas A&M University. http://turbolab.tamu.edu/proc/turboproc/T24/T24221-230.pdf.

Stahley, J. S. 2001. Design, Operation, and Maintenance Considerations for Improved Dry Gas Seal Reliability in Centrifugal Compressors. In *Proceedings of the 30th Turbomachinery Symposium*, 203–208, Turbomachinery Laboratory, Texas A&M University. http://turbolab.tamu.edu/proc/turboproc/T30/t30pg203.pdf.

Chung Leong is an independent process consultant, having previously worked for operating and engineering companies in the oil and gas and petrochemical industries for more than 35 years. His current interests include process optimization, process intensification, design strategy, and project execution. Leong holds a BS degree in chemical engineering from Teesside University, UK. He is a member of SPE.

Sanjiv Goyal is the process engineering manager with Fluor Enterprises, Houston, and has worked with various operating and engineering companies for more than 35 years in the upstream oil and gas, petrochemical, and gas-processing industries. His present interests include plant configuration and energy savings in LNG and floating LNG technologies. Goyal holds a BE degree in chemical engineering from Indian Institute of Technology, Roorkee. He is a member of SPE and the American Institute of Chemical Engineers.